Universal Gear Shift Sender
GSS-2000

The easiest system to install and use on the market.

The Dakota Digital universal gear shift sender consists of three main components; the sensor, decoder, and mounting brackets. The sensor mounts to the transmission and converts the transmission linkage arm position into an electrical signal. The decoder converts the electric signal from the sensor into the individual outputs for each gear and provides the neutral safety and backup features. The outputs are selectable for positive or negative outputs. This unit can also support single-wire indicators from Dakota Digital, Inc. The mounting brackets attach the sensor to the transmission housing and linkage arm.

The only parts of the gear shift sender that are different for the different transmissions are the mounting brackets. The GM 350, 400, and 700-R4 use the same linkage connector and mounting plate, but different holes in the mounting plate. The Ford C-6 and C-4 each have different mounting plates and linkage connectors. For other transmissions, a universal mounting plate is provided.

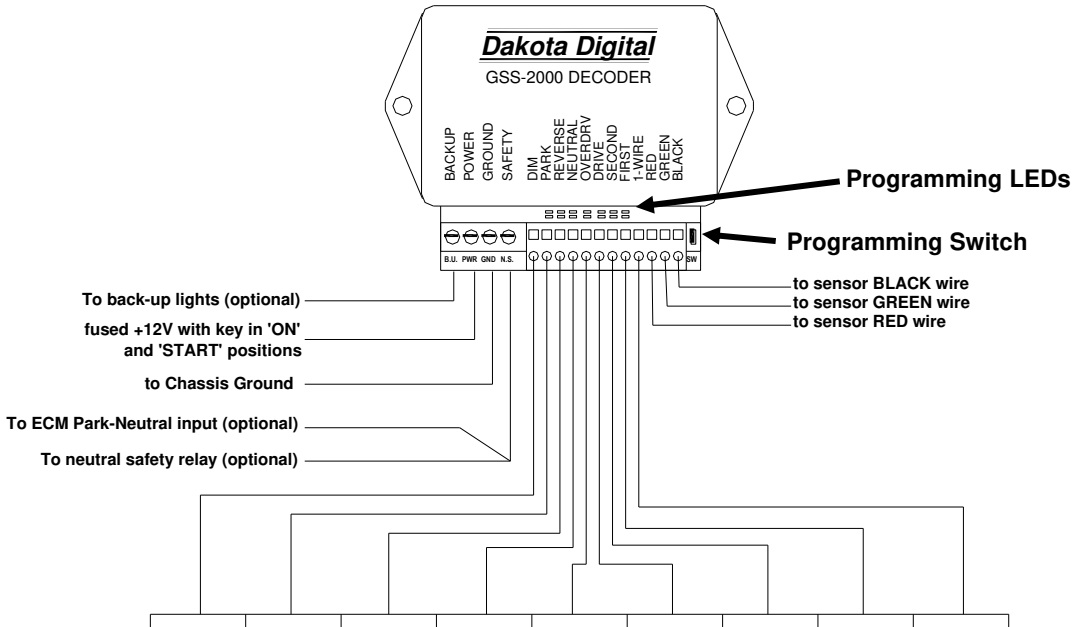

TYPE OF INDICATOR SYSTEM

	DIM	PARK	REVERSE	NEUTRAL	OVRDRV	DRIVE	SECOND	FIRST	1-WIRE
INDIVIDUAL BULBS	PARKING LIGHTS	RED WIRE (+)	RED WIRE (+)	RED WIRE (+)	RED WIRE (+)	RED WIRE (+)	RED WIRE (+)	RED WIRE (+)	NOT USED
STR SYSTEM	NOT USED	PARK TERMINAL	REVERSE TERMINAL	NEUTRAL TERMINAL	OVRDRV TERMINAL	DRIVE TERMINAL	SECOND TERMINAL	FIRST TERMINAL	NOT USED
DGS-1	PARKING LIGHTS	GREEN WIRE (+)	GRAY WIRE (+)	PURPLE WIRE (+)	YELLOW WIRE (+)	ORANGE WIRE (+)	BLUE WIRE (+)	BROWN WIRE (+)	NOT USED
DGS-2	NOT USED	GREEN WIRE (+)	GRAY WIRE (+)	PURPLE WIRE (+)	YELLOW WIRE (+)	ORANGE WIRE (+)	BLUE WIRE (+)	BROWN WIRE (+)	NOT USED
VFD/VHX SYSTEM	NOT USED	NOT USED	NOT USED	NOT USED	NOT USED	NOT USED	NOT USED	NOT USED	GEAR TERMINAL
ODYR/SLX GAUGE	NOT USED	NOT USED	NOT USED	NOT USED	NOT USED	NOT USED	NOT USED	NOT USED	White/Green WIRE
DGS-3 DGS-4	NOT USED	NOT USED	NOT USED	NOT USED	NOT USED	NOT USED	NOT USED	NOT USED	YELLOW WIRE
LOKAR (- OUT)	PARKING LIGHTS	PURPLE WIRE (-)	YELLOW WIRE (-)	BLUE WIRE (-)	BROWN or NOT USED	ORANGE or BROWN	WHITE or ORANGE	GREEN or WHITE	NOT USED

PARTS LIST

description	quantity
gear shift decoder	1
relay for neutral safety	1
gear shift sender with 10' cable	1
long gear shift sender arm	1
spacer (7/16" hex nut)	2
5/16" x 1" bolt	2
5 1/4" rod	1
4 1/4" rod	1
3 1/4" rod	1
1/8" retainer clips for rods	6
GM mounting plate	1
GM linkage connector	1
C-4 mounting plate	1
C-4 linkage connector	1
C-6 mounting plate	1
C-6 linkage connector	1
universal mounting plate	1

The neutral safety and backup light features do not have to be connected for gear sender to work. These are optional features provided for vehicles which do not already have these provisions.

CONNECTING SENSOR TO DECODER

The sensor has a 10 foot gray cable attached to it. This cable contains three wires which connect to the decoder. Connect the RED wire to the terminal marked RED Connect the GREEN wire to the terminal marked GREEN. Connect the BLACK wire to the terminal marked BLACK.

CONNECTING TO THE GEAR SHIFT DISPLAY

Gear shift displays are not included with the GSS-2000, but it will interface with all of the standard display systems available. Each gear output will provide 12 volts at up to 0.2 amperes or can be programmed to provide grounding outputs. This is enough current capacity for any LED indicator or low power incandescent bulbs. When individual lights are used for each gear, connect the negative wire to ground and the positive wire to the appropriate gear output terminal on the decoder. When using Dakota Digital's Digital Gear Shift Indicator connect the wires to the decoder according to the instructions provided with the indicator. The GSS-2000 will also work with any Dakota Digital vacuum florescent display system. Connect wires between the decoder and the display system control box.

GSS-2000 Specifications			
SUPPLY			
Voltage Input (+12) Range		5.6 to 22 V	
INPUTS			
		DIM Off	DIM On
DIM		< 1.6 V	> 4.0 V
OUTPUTS			
		Output Current	
Gear Output		< 0.2 A	
BACKUP		< 15 A	
CURRENT DRAW			
	Park-Neutral	Reverse	Drive
W/O Safety Relay	≈ 30 mA	≈ 80 mA	≈ 20 mA
W/ Safety Relay	≈ 160 mA	≈ 80 mA	≈ 20 mA

PROGRAMMING THE GEARS

Programming is done using the set switch, small switch on the decoder located by the sensor connection terminals, and watching the programming LED's(not visible until power applied) located near each gear output on the GSS-2000.

The PARK light is directly behind the PARK terminal, REVERSE light is directly behind the REVERSE terminal, etc.

1. Place the transmission in PARK and make sure the key is off.
2. Press and hold the set switch on the GSS-2000 decoder while turning the key on.
3. The lights should come on either all green or all red. RED is for +12V outputs for Dakota Digital and most other displays. GREEN is for ground outputs for Lokar displays.
4. Press and release the switch to change the output type, toggle from RED or GREEN LEDs lit. Press and hold the switch, for about 4 seconds, until both RED and GREEN LEDs turn on to save the setting. Release the switch and begin gear programming.
5. The PARK lights should be flashing between RED and GREEN. (Transmission should be in PARK)
6. Press and hold the set switch. The PARK light should remain on steady, not flashing.
7. Release the set switch. The REVERSE lights should begin flashing RED and GREEN; The PARK light will go out.
8. Shift the transmission to REVERSE.
9. Press and hold the set switch. The REVERSE light should remain on steady. (If the REVERSE light will not quit flashing, then the sensor is not turning or following.)
10. Release the set switch. The NEUTRAL lights should begin flashing and the REVERSE light will go out.
11. Shift the transmission to NEUTRAL.
12. Press and hold the set switch. The NEUTRAL light should remain on steady. (If the light will not quit flashing, then the sensor is not turning.)
13. Release the set switch. The OVERDRIVE lights should begin flashing and the NEUTRAL light will go out.
14. Shift the transmission to OVERDRIVE. (If you do not have overdrive, then shift to DRIVE.)
15. Press and hold the set switch. The OVERDRIVE light should remain on steady. (If the light will not quit flashing, then the sensor is not turning.)
16. Release the set switch. The DRIVE lights should begin flashing and the OVERDRIVE light will go out.
17. Shift the transmission to DRIVE. (If it is already in drive, then do not move it.)
18. Press and hold the set switch. The DRIVE light should remain on steady.
19. Release the set switch. The SECOND lights should begin flashing and the DRIVE light will go out.
20. Shift the transmission to SECOND. (If you do not have second, then shift to FIRST.)
21. Press and hold the set switch. The SECOND light should remain on steady. (If the light will not quit flashing, then the sensor is not turning.)
22. Release the set switch. The FIRST lights should begin flashing and the SECOND light will go out.
23. Shift the transmission to FIRST. (If it is already in first, then do not move it.)
24. Press and hold the set switch. The FIRST light should remain on steady.
25. Release the set switch. The FIRST light will go out and then come back on steady.
26. Shift the transmission through each of the gears to verify that the programming lights match correctly, turning on steady when in appropriate gear.

CONNECTING THE NEUTRAL SAFETY RELAY

If your vehicle already has a neutral safety switch in the wiring harness to prevent the vehicle from starting while it is in gear, then you do not need to connect this neutral safety switch.

Otherwise, cut the wire that goes from your starter switch to the starter solenoid. Connect one end of the wire to the GREEN wire from the relay and connect the other end to the BLACK wire from the relay. For wiring harnesses which provide wires for the neutral safety, connect one side to the GREEN wire and the other side to the BLACK wire. The wire you cut and connect to the relay should provide +12V to the starter solenoid when the ignition switch is in the start position, which engages the starter motor.

The WHITE wire from the relay connects to the SAFETY terminal on the decoder. The RED wire connects to the power wire for the decoder.

For the neutral safety switch to operate properly, the POWER terminal on the decoder as well as the red wire on the relay must have power when the key is in both the run and start positions.

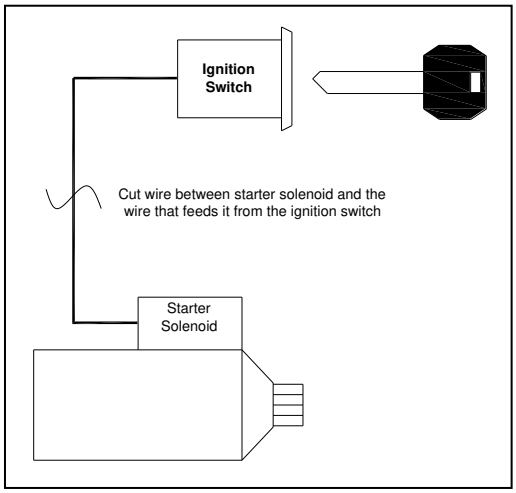

Typical starter wiring

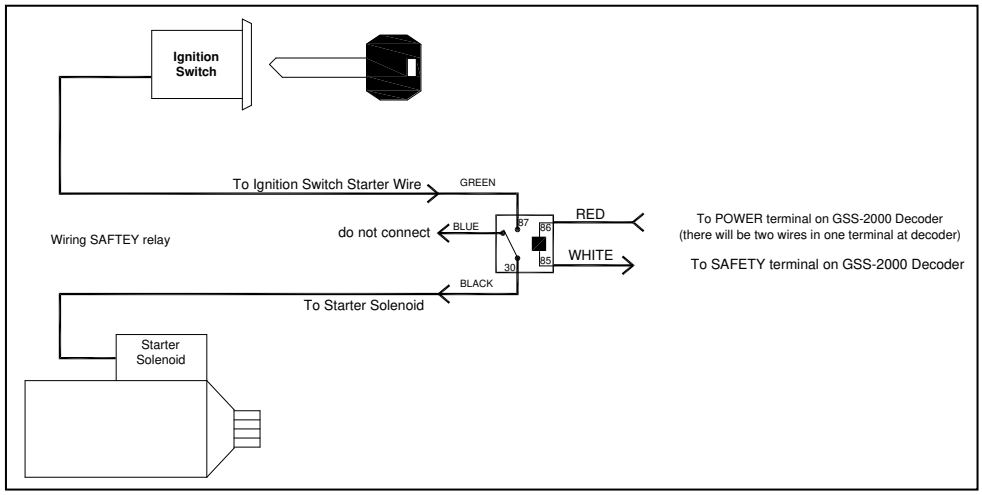

Wiring after SAFTEY relay installed

CONNECTING PARK-NEUTRAL SIGNAL TO AN ECM

If your vehicle is fuel injected and the ECM requires a signal when the transmission is in either park or neutral, the neutral safety terminal can be used. The SAFETY terminal provides a ground when the transmission is in park or neutral. This can be connected to the ECM in order to pass vehicle inspection.

The SAFETY terminal can be used for both a neutral safety and ECM signal at the same time.

CONNECTING BACKUP LIGHTS TO THE GSS-2000

If your vehicle already has a backup light switch, then you do not need to connect anything to the BACKUP terminal. If you do not have a backup switch and will be using backup lights on your vehicle, then connect the “hot side” of the backup lights to the terminal marked BACKUP. This circuit is designed to supply +12 V up to 15 amps when the transmission is in reverse.

MOUNTING SENSOR TO TRANSMISSION.

The diagrams on the following pages show the mounting hardware used and mounting location for the most common transmissions. For most applications, the sensor mounts to the side of the transmission using a couple of the transmission pan bolts. A metal plate will attach to the transmission linkage so that it rotates as the transmission is shifted. A rod with a couple of bends in it connects the sensor arm to the plate on the transmission linkage. This allows the sensor arm to move as the transmission is shifted through the gears. Each gear will correspond to a different position for the sensor arm. It does not matter exactly where the sensor arm is when it is in park, first or any other gear. Once the Decoder has been programmed it will remember the positions. The Decoder converts these positions into separate a 12 volt or ground output for each gear.

If a Kugel adjustable shifter is being used, you will need a Kugel nut to attach the sensor to the shift linkage. The Kugel nut is available from Dakota Digital, Inc.

As the transmission is shifted through all of the gears, the sensor arm should not hit either of its stops, or get 'bound' or 'hung up'. The arm which is mounted on the sender allows for a 1 3/4" throw with the outside hole and 1 5/16" throw with the inside hole. The longer arm which is sent in the kit allows for throws from 3 1/2" with the outside hole to 2 3/16" with the inside hole. When properly adjusted, the sensor arm will move through about 1/2 or more of its full travel. If the sensor arm moves through less than 1/3 of its travel, it may be difficult for the decoder to distinguish between gears. It does not matter which direction the sensor arm turns going from Park to Low. Once the Decoder has been programmed it will read all of the gears correctly.

If the typical mounting location for the sensor will not work, the sensor can be mounted anywhere that will allow the sensor arm to move as the gear shift selector moves. The sensor arm can attach either at the transmission linkage or at the gear selector knob or anywhere in between.

A universal mounting plate is included to make custom fabrication easier. This plate has several mounting holes for the sensor, but no holes for mounting the plate to the transmission. To use this plate, first determine the best mounting location on your transmission and then mark and drill holes into the universal plate to secure it. In most instances the entire length of the plate will not be needed and it can be cut down using a hack saw or metal shears.

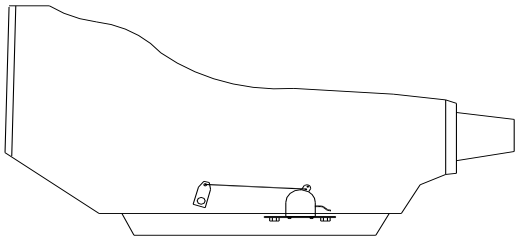

Approximate sender mounting location on transmission.

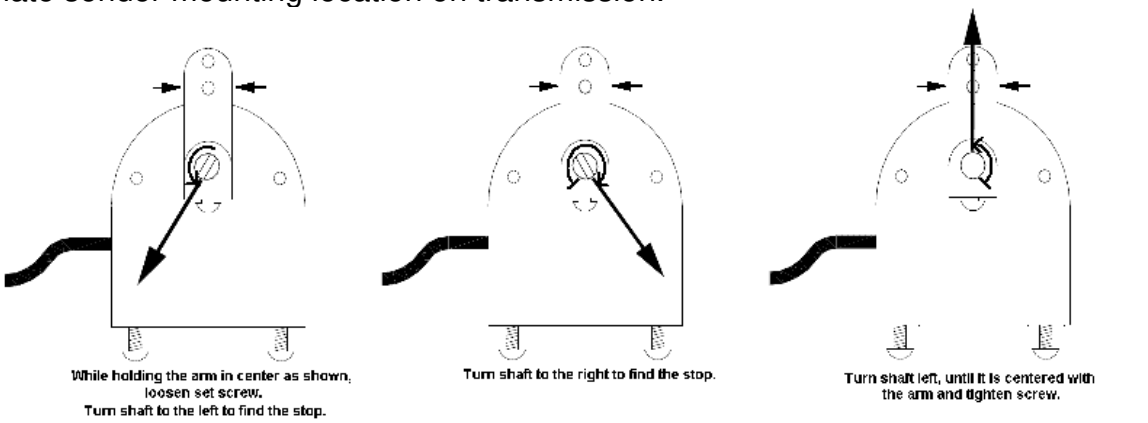

When moving or repositioning the sensor arm, be sure the slot in the center of the shaft is aligned with the arm as shown here.

Mounting to a GM 350, 400, or 700-R4 transmission.

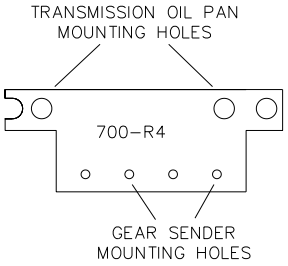

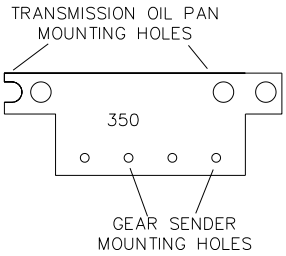

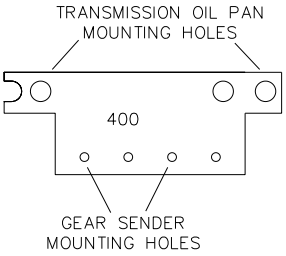

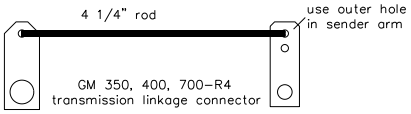

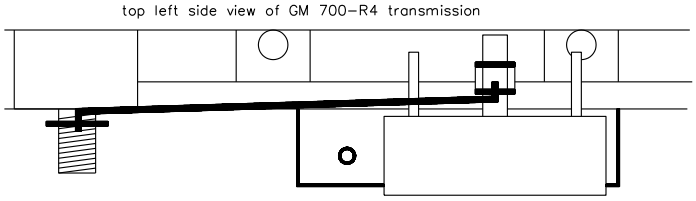

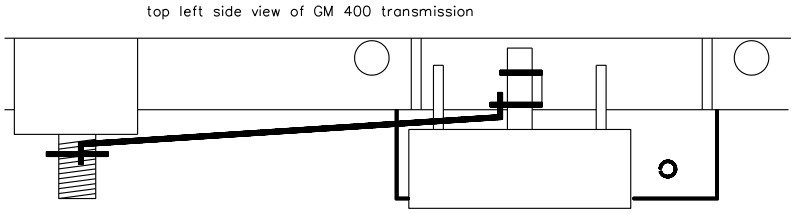

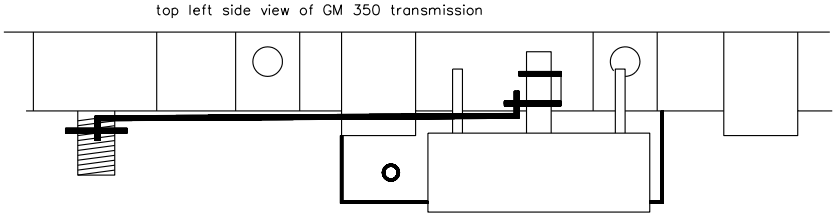

Mounting to a Ford C-6 transmission

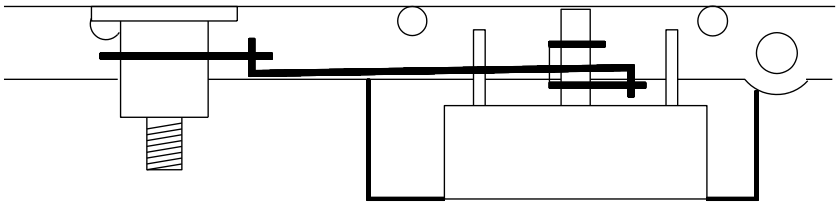

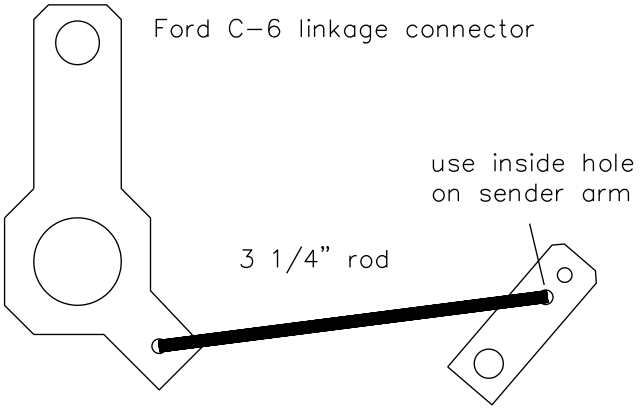

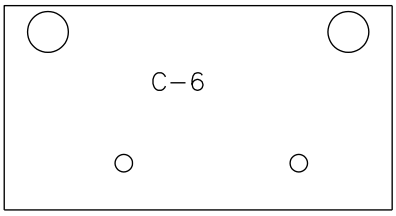

Depending on the shifter you are using, you may use the linkage connector provided. The bottom hole is for the sensor rod, the center hole is a pivot point for the connector, and the upper hole connects to the linkage rod. A nylon cable tie can be passed around the linkage connector and transmission shift arm to keep the linkage connector secured tightly. If this does not fit your shifter, then you will need to drill an 1/8" hole into your shift linkage arm to attach the rod to.

The GM, Ford C-6, and universal mounting plates secure to the transmission oil pan using the supplied 1” bolt, spacer, and washer provided in the kit. On the universal mounting plate, the holes will have to be drilled to line up with the pan bolts being used on the transmission.

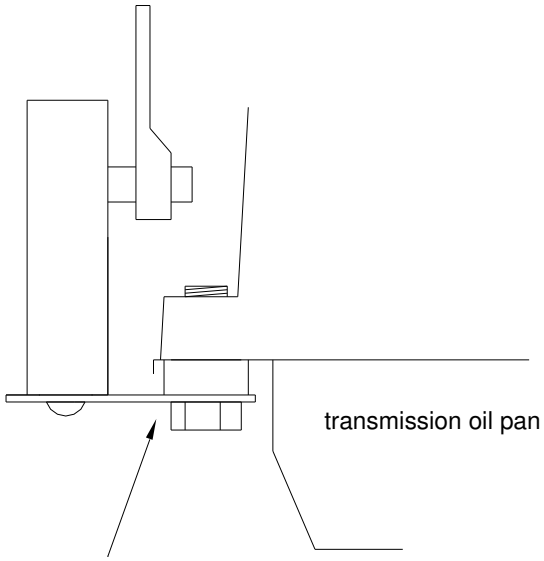

Use 3/8" x 1" bolt and 3/8" spacer as shown above to secure mounting plate to transmission.

Use 5/16” x 1” bolt and spacer (7/16” nut) as shown above to secure the mounting plate to the transmission

Universal mounting plate.

This can be used with transmissions for which a specific mounting plate is not provided.

Mounting to a Ford C-4 transmission

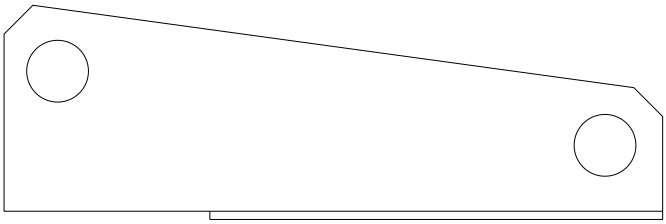

This mounting plate connects to the lower two bolts of the four bolt plate located on the left side of the transmission just behind the shift linkage arm.

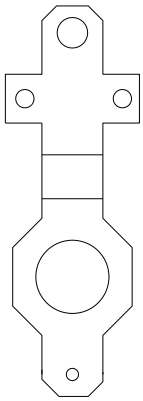

Ford C-4 linkage connector.

Depending on the shifter you are using, you may use the linkage connector provided. The bottom hole is for the sensor rod, the center hole is a pivot point for the connector, and the upper hole connects to the linkage rod. A nylon cable tie can be passed through the two side holes and around the linkage connector to keep the linkage connector secured tightly. If this does not fit your shifter, then you will need to drill an 1/8" hole into your shift linkage arm to attach the rod to.

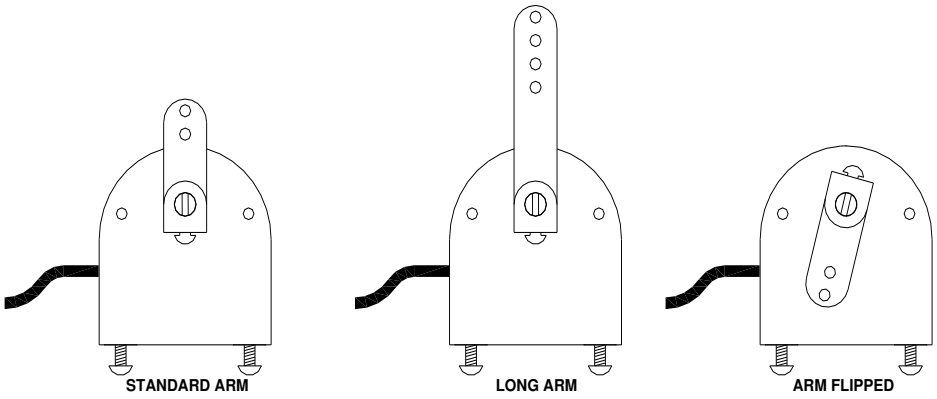

For the C-4 transmission the arm on the gear shift sender will need to be flipped around so that it rotates on the bottom half. Make sure that the slot in the shaft is in line with the sender arm as shown in the diagram.

TROUBLE SHOOTING GUIDE

Problem	Cause	Solution
None of the lights will come on.	Power wire not connected.	Make sure +12 volt wire is connected.
	Ground wire not connected.	Make sure the ground wire is connected to a good ground.
Always shows the same gear or will not set properly.	Sensor wire not connected.	Make sure all three wires from the sensor are connected.
	Sensor arm not connected.	Make sure the sensor arm moves as the gear selector is moved.
	Sensor linkage connector is stuck or bound up.	Make sure the linkage connector and sensor arm move freely as the trans. is shifted through the gears
	Decoder is set for wrong output type.	Repeat steps 1-4 in Programming the Gears on page 3 and select all red lights on.
	Decoder has not been set.	See Programming the Gears section on page 3 of the manual.
Indicator lights are all on Except for the correct gear.	Decoder is set for wrong output type.	Repeat steps 1-4 in Programming the Gears on page 3 and select the opposite light color. (red or green).
Reverse and Overdrive lights are on at the same time.	Sensor ground wire open.	Check sensor wire connections.
	Sensor is moving out of its operating range.	Loosen sensor arm set screw. Rotate the sensor shaft so that the slot in the end aligns with the sensor arm. Retighten set screw. (see page 5)
Overdrive and Second lights are on at the same time.	Sensor RED wire open.	Check sensor wire connections.
	Sensor signal wire is shorted to ground.	Check sensor cable.
	Sensor is moving out of its Operating range.	Loosen sensor arm set screw. Rotate the sensor shaft so that the slot in the end aligns with the sensor arm. Retighten set screw. (see page 5)
Overdrive, Neutral, and Drive Lights are flashing.	Decoder settings are incorrect or have been corrupted.	Reprogram the decoder. See the Programming The Gears section on page 3.
The neutral safety relay And unit just make "clicking" sound.	Decoder is losing power	Make sure PWR terminal has 12 volts when the key is in both the **on** and **start** positions.
The neutral safety does not allow the starter to engage.	Decoder is losing power when key is placed in the start position.	Make sure PWR terminal has 12 volts when the key is in both the **on** and **start** positions.

SERVICE AND REPAIR

DAKOTA DIGITAL offers complete service and repair of its product line. In addition, technical consultation is available to help you work through any questions or problems you may be having installing one of our products. Please read through the Troubleshooting Guide. There, you will find the solution to most problems. **Should you ever need to send the unit back for repairs, please call our technical support line, (605) 332-6513, to request a Return Merchandise Authorization number.** Package the product in a good quality box along with plenty of packing material. Ship the product by UPS or insured Parcel Post. Be sure to include the RMA number on the package, and include a complete description of the problem with RMA number, your full name and address (street address preferred), and a telephone number where you can be reached during the day. Any returns for warranty work must include a copy of the dated sales receipt from your place of purchase. Send no money. We will bill you after repair.

Dakota Digital Limited Lifetime Warranty

DAKOTA DIGITAL warrants to the ORIGINAL PURCHASER of this product that should it, under normal use and condition, be proven defective in material or workmanship for the lifetime of the original vehicle it was installed in, such defect(s) will be repaired or replaced at Dakota Digital's option.

This warranty does not cover nor extend to damage to the vehicle's systems, and does not cover diagnosis, removal or reinstallation of the product. This Warranty does not apply to any product or part thereof which in the opinion of the Company has been damaged through alteration, improper installation, mishandling, misuse, neglect, or accident. Dakota Digital assumes no responsibility for loss of time, vehicle use, owner inconvenience nor related expenses.
Dakota Digital will cover the return standard freight once the product has been evaluated for warranty consideration, however the incoming transportation is to be covered by the owner.

This Warranty is in lieu of all other expressed warranties or liabilities. Any implied warranties, including any implied warranty of merchantability, shall be limited to the duration of this written warranty. No person or representative is authorized to assume, for Dakota Digital, any liability other than expressed herein in connection with the sale of this product.

⚠**WARNING:** This product can expose you to chemicals including lead, which is known to the State of California to cause cancer and birth defects or other reproductive harm. For more information go to www.P65Warnings.ca.gov

Dakota Digital
4510 W. 61st St. North
Sioux Falls, SD 57107
www.dakotadigital.com
dakotasupport@dakotadigital.com
Phone (605) 332-6513
Fax (605) 339-4106
Copyright 2011 - Dakota Digital, Inc.