Watson's StreetWorks
4 Bud Way, Suite 3, Nashua, NH 03063 866-859-0513
Tech@Watsons-Streetworks.com

Toggle Battery Disconnect #L27TM

- Toggle "ON", Toggle "OFF" with Hidden Toggle Switch
- Great for Anti-Theft deterrent
- Prevents Battery Drain
- Includes auxiliary "HOT" feed for clock or computer
- Continuous duty rated at 110 amps, Surge to 750 amps
- NO DRAIN ON BATTERY WHEN IN USE

NOTE: Modification to your battery cable is *REQUIRED* to properly install this kit. Each installation will be slightly different, some additional parts or battery cable may be needed. Toggle switch is for inside use only.

Thank you for buying a StreetWorks product. Be confident that it will provide the quality and performance that you demand for your car. *Please read and understand all installation instructions before beginning.* Planning and preparation will make the actual installation process easy and quick.

1. Determine where you want to mount the disconnect solenoid. This should be in a location that is not easily accessible from outside the vehicle. Provided are (2) 5/16" self-tapping screws that require ¼" diameter drilled holes. If not mounted to a grounded surface, it may be necessary to ground the solenoid case.

2. Determine toggle switch mounting location. It requires a ¼" diameter hole for mounting. Ground the GREEN wire on switch using the provided ring terminal and sheet metal screw. The sheet metal screw requires a 1/8" diameter hole.

3. Wire the components per the diagram below.

4. To operate, toggle the switch once to turn the battery feed "ON" *(Connected)*

The solenoid will keep the power ON until you toggle the switch again. Test your set-up to assure it is functioning properly. If desired, a "POWER ON" indicator light may be wired between a (+) battery fed circuit and ground to indicate when your battery is connected or disconnected.

NOTE: Accessories powered off of the auxiliary hot feed should be fused separately.

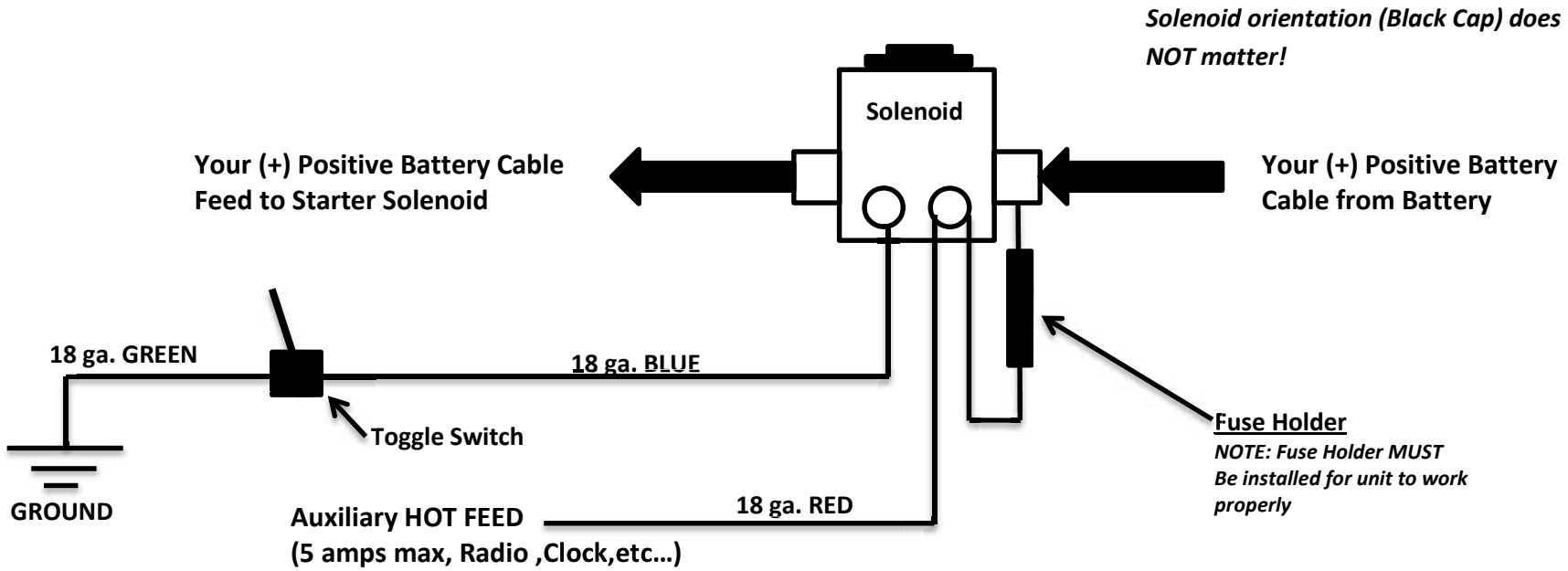

StreetWorks Battery Disconnect Solenoid Trouble Shooting Guide

StreetWorks Battery Disconnect kits use a solenoid style, latching relay. When voltage is momentarily applied across the (2) smaller Terminals, it energizes the internal solenoid coil causing the relay to latch into the “ON” or “OFF” position. It will remain in that position until voltage is momentarily applied again. Should you encounter any problems during installation, or subsequent use of your Battery Disconnect, please review the following items:

1. Double check your wiring, start with the Ground. This is where most electrical issues stem from.
2. Reference your symptoms with the chart below and follow recommended actions.

SYMPTOMS	ACTIONS
Nothing happens, no sounds no nothing.	Check for dead battery, loose connections or a bad ground
When I trigger the switch, the fuse blows.	There is a dead short in the switch circuit. Check those wires.
It used to work fine, but just quit working.	Check the fuse.
The solenoid chatters when I hold the switch.	Check for low battery voltage and charge.
There is power to some accessories when disconnected.	Make sure you have isolated items being fed wit auxiliary hot feed
The solenoid “clicks” but does not latch “ON” or “OFF”.	Bench test solenoid per procedure below.
It “connects” or “disconnects” while I hold the switch but does not latch.	Bench test solenoid per procedure below.
If all else fails….	Bench test solenoid per procedure below.

How to bench test the disconnect solenoid

Test light or Volt Ohm Meter Buzzer method. With either method the light or the buzzer should come “ON” and stay “ON” with one press of switch, both test light and buzzer should then turn “OFF” and stay “OFF” with another. Cycle slowly about 5 times to check solenoid. ***See Below***